One-touch fittings—threaded type

Ordering code

Same diameter type fittings PL 6 01 □ □

① ② ③ ④ ⑤

①Model		②Port size	③Thread connection		④Standard color			⑤Thread type
			Thread connection	Adaptable port size	Standard color	Specification	Adaptable model	
PHW: Double universal male elbow	PL: Male elbow	4: Φ4mm 6: Φ6mm 8: Φ8mm 10: Φ10mm 12: Φ12mm	M5: M5X0.8	Φ4, Φ6	Blank: Gray	Release button: Gray	PCF PMF	Blank: PT
PHF: Universal female elbow	PLL: Extended male elbow					Release button: Gray Body:Gray	Others	
PEB: Male branch tee	PLF: Female elbow							
PED: Male run tee	PCF: Female connector		01: 1/8" 02: 1/4" 03: 3/8" 04: 1/2"	Φ4, Φ6 Φ8, Φ10 Φ12	D: Black	Release button: Black	PCF PMF	
PYB: Branch "Y"	PMF: Bulkhead connector					Release button: Black Body: Black	Others	
PZB: Threaded cross	PH: Universal male elbow							

Different diameter type fittings PKD 6 – 4 01 □ □

① ② ③ ④ ⑤ ⑥

①Model	②Port size	③Port size	④Thread connection	⑤Standard color		⑥Thread type
				Standard color	Specification	
PKD: Male reducer triple branch	6: Φ6mm 8: Φ8mm 10: Φ10mm	4: Φ4mm 6: Φ6mm 8: Φ8mm	01: 1/8" 02: 1/4" 03: 3/8"	Blank: Gray	Release button: Gray/Body:Gray	Blank: PT
				D: Black	Release button: Black/Body: Black	

Specification

Operating pressure range	0~10kgf/cm²(0~1.0MPa)
Negative pressure	-750mmHg(10Torr)
Proof pressure	1.5MPa
Ambient and fluid temperature (℃)	-20~70
Applicable tubing	Soft nylon or polyurethane
Color	Grey/black

Product feature

1. Variable models can be widely used in every kind of pneumatic systems.
2. High circulation performance: bear the same flow with the volume of the tubing inside diameter.
3. Connect tubing easily and conveniently. The tubing connection portion is safe and durable.
4. The threaded portion is covered with sealant and the M5 thread is attached with a sealing gasket to prevent air leakage over the connection thread portion.
5. The nickel plated body is anti-corrosion and anti-pollution, which allows a broader application.

Inner structure

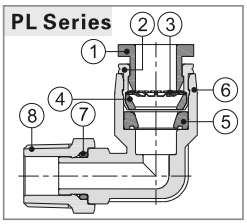

No.	Item	Material
1	Release button	POM
2	Guide	Aluminum alloy
3	Spring gasket	Stainless steel
4	Chuck	POM
5	O-ring	NBR
6	Body	PBT
7	O-ring	NBR
8	Stud	Brass

Table for interface port and tube O.D.

Product series	Thread type	Port size Φ4	Φ6	Φ8	Φ10	Φ12
PL	M5	●	●			
	1/8"	●	●	●	●	●
	1/4"	●	●	●	●	●
	3/8"		●	●	●	●
	1/2"		●	●	●	●
PLL	M5	●	●			
	1/8"	●	●	●	●	
	1/4"	●	●	●	●	●
	3/8"		●	●	●	●
	1/2"				●	●
PEB PED PYB	M5	●	●			
	1/8"	●	●	●	●	
	1/4"	●	●	●	●	●
	3/8"		●	●	●	●
	1/2"			●	●	●
PH PHF	M5	●	●			
	1/8"	●	●	●		
	1/4"		●	●	●	
	3/8"		●	●	●	●
	1/2"			●	●	●
PHW	1/8"	●	●	●		
	1/4"		●	●	●	
	3/8"		●	●	●	●
	1/2"			●	●	●
PZB	1/8"		●	●		
	1/4"		●	●	●	
	3/8"		●	●	●	●
	1/2"			●	●	●

Product series	Thread type	Port size Φ4	Φ6	Φ8	Φ10	Φ12
PLF	M5	●	●			
	1/8"	●	●	●	●	
	1/4"	●	●	●	●	●
	3/8"		●	●	●	●
	1/2"			●	●	●
PCF	M5	●	●			
	1/8"	●	●	●	●	
	1/4"	●	●	●	●	●
	3/8"		●	●	●	●
	1/2"		●	●	●	●
PMF	M5					
	1/8"	●	●	●	●	
	1/4"	●	●	●	●	●
	3/8"		●	●	●	●
	1/2"			●	●	●

Product series	Thread type	Port size Φ6–Φ4	Φ8–Φ6	Φ10–Φ8
PKD	1/8"	●		
	1/4"		●	
	3/8"			●

One-touch fittings—threaded type

Dimensions

PL Series

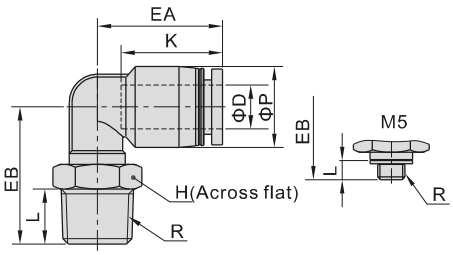

Model\Item	ΦD	R	ΦP	L	K	EA	EB	H	Weight(g)
PL4M5	4	M5×0.8	9	3.5	14	17	15	8	3
PL401		1/8"	9	7.5	14	17	18.5	10	4.5
PL402		1/4"	9	10	14	17	22.0	14	12
PL6M5	6	M5×0.8	12.5	3.5	17	20	17.0	8	4.5
PL601		1/8"	12.5	7.5	17	20	20.5	10	6
PL602		1/4"	12.5	10	17	20	24.0	14	13.5
PL603		3/8"	12.5	11	17	20	25.5	17	20.5
PL604		1/2"	12.5	14	17	20	30.0	21	36
PL801	8	1/8"	15	7.5	18.5	23	20.5	10	7 .5
PL802		1/4"	15	10	18.5	23	25.0	14	13
PL803		3/8"	15	11	18.5	23	26.5	17	21
PL804		1/2"	15	14	18.5	23	31.0	21	36
PL1001	10	1/8"	18	7.5	21	25.5	25.0	17	16.5
PL1002		1/4"	18	10	21	25.5	27.0	17	19
PL1003		3/8"	18	11	21	25.5	28.0	17	21
PL1004		1/2"	18	14	21	25.5	32.5	21	37
PL1201	12	1/8"	21	7.5	23	28.5	26.5	17	19
PL1202		1/4"	21	10	23	28.5	28.5	17	21.5
PL1203		3/8"	21	11	23	29.5	33	17	25.5
PL1204		1/2"	21	14	23	29.5	34	21	37

PCF Series

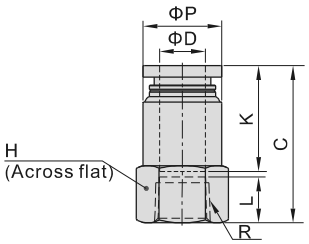

Model\Item	ΦD	R	ΦP	L	C	K	H	Weight(g)
PCF4M5	4	M5×0.8	9	5	21	14	10	2.7
PCF401		1/8"	9.5	8	23	14	14	4.5
PCF402		1/4"	9.5	11	26	14	17	6.5
PCF6M5	6	M5×0.8	12	5	21.5	16.5	12	3.9
PCF601		1/8"	12.5	8	25.5	16.5	14	5.6
PCF602		1/4"	12.5	11	28.5	16.5	17	7.5
PCF603		3/8"	13	12	29.5	16.5	21	10.7
PCF604		1/2"	13	13.5	31.0	16.5	25	13.8
PCF801	8	1/8"	14	8	27.5	18.5	14	5.8
PCF802		1/4"	14.5	11	30.5	18.5	17	8.4
PCF803		3/8"	14.5	12	31.5	18.5	21	11.2
PCF804		1/2"	14.5	13.5	33	18.5	25	14.4
PCF1001	10	1/8"	17	8	29	21	17	9.5
PCF1002		1/4"	17	11	33	21	17	9.9
PCF1003		3/8"	18	12	34	21	21	14
PCF1004		1/2"	18	13.5	35.5	21	25	17.1
PCF1202	12	1/4"	21	11	33.5	23	21	17.5
PCF1203		3/8"	21	12	35.5	23	21	16.6
PCF1204		1/2"	21	13.5	37	23	25	19.7

PMF Series

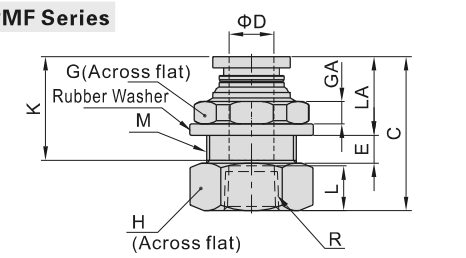

Model\Item	ΦD	R	M	L	C	K	LA	E	GA	G	H	Weight(g)
PMF401	4	1/8"	M12X1	8	25	14	12	4	4	14	14	6.4
PMF402		1/4"	M12X1	11	29	14	12	4	4	14	17	9
PMF601	6	1/8"	M14X1	8	25.5	16.5	12.5	5	4	17	17	9.1
PMF602		1/4"	M14X1	11	30.5	16.5	12.5	5	4	17	17	10.9
PMF603		3/8"	M14X1	12	31.5	16.5	12.5	5	4	17	21	13.2
PMF801	8	1/8"	M16X1	8	27.5	18.5	13.5	5.5	4	19	19	12.8
PMF802		1/4"	M16X1	11	32	18.5	13.5	5.5	4	19	19	15.7
PMF803		3/8"	M16X1	12	33	18.5	13.5	5.5	4	19	21	15
PMF804		1/2"	M16X1	13.5	34.5	18.5	13.5	5.5	4	19	25	18.1
PMF1001	10	1/8"	M20X1	8	30	21	14.5	7.5	5	24	22	19.6
PMF1002		1/4"	M20X1	11	35	21	14.5	7.5	5	24	22	22.8
PMF1003		3/8"	M20X1	12	36	21	14.5	7.5	5	24	22	21.1
PMF1004		1/2"	M20X1	13.5	37.5	21	14.5	7.5	5	24	25	23.2
PMF1202	12	1/4"	M22X1	11	34.5	23	15.5	8	6	27	24	26.2
PMF1203		3/8"	M22X1	12	37.5	23	15.5	8	6	27	24	27
PMF1204		1/2"	M22X1	13.5	39	23	15.5	8	6	27	25	26.2

PLF Series

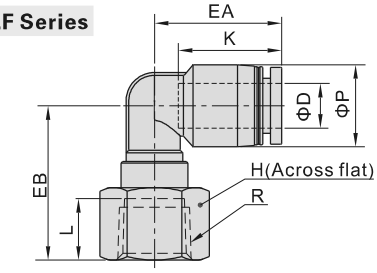

Model\Item	ΦD	R	ΦP	L	K	EA	EB	H	Weight(g)
PLF4M5	4	M5×0.8	9	5	14	17	16	10	2.9
PLF401		1/8"	9	8	14	17	21	14	4.6
PLF402		1/4"	9	11	14	17	24	17	6.8
PLF6M5	6	M5×0.8	12.5	5	17	20	18.5	10	7
PLF601		1/8"	12.5	8	17	20	23	14	5.8
PLF602		1/4"	12.5	11	17	20	26	17	8
PLF603		3/8"	12.5	12	17	20	27	21	10.7
PLF801	8	1/8"	15	8	18.5	23	20	14	6.6
PLF802		1/4"	15	11	18.5	23	27.5	17	9.2
PLF803		3/8"	15	12	18.5	23	28.5	21	11.9
PLF804		1/2"	15	13.5	18.5	23	30	25	15.2
PLF1001	10	1/8"	18	8	21	25.5	24	17	11.3
PLF1002		1/4"	18	11	21	25.5	26.5	17	11.2
PLF1003		3/8"	18	12	21	25.5	30	21	14.5
PLF1004		1/2"	18	13.5	21	25.5	31.5	25	17.4
PLF1202	12	1/4"	21	11	23	28.5	28.5	17	13.7
PLF1203		3/8"	21	12	23	29.5	32	21	17.4
PLF1204		1/2"	21	13.5	23	29.5	33	25	20.4

One-touch fittings—threaded type

PLL Series

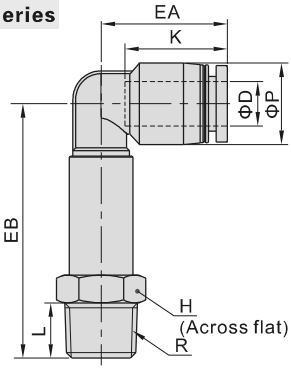

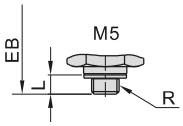

Model\Item	ΦD	R	ΦP	L	K	EA	EB	H	Weight(g)
PLL4M5	4	M5×0.8	9	3.5	14	17	32.5	8	8.9
PLL401		1/8"	9	7.5	14	17	35.5	10	12.3
PLL402		1/4"	9	10	14	17	38.5	14	16.9
PLL6M5	6	M5×0.8	12.5	3.5	17	20	34.5	8	9.9
PLL601		1/8"	12.5	7.5	17	20	37.5	10	13
PLL602		1/4"	12.5	10	17	20	40.5	14	18
PLL603		3/8"	12.5	11	17	20	43	17	23.4
PLL801	8	1/8"	15	7.5	18.5	23	43.5	12	16.6
PLL802		1/4"	15	10	18.5	23	45.5	14	22.7
PLL803		3/8"	15	11	18.5	23	48	17	27.7
PLL1001	10	1/8"	18	7.5	21	25.5	50.5	15	37.5
PLL1002		1/4"	18	10	21	25.5	53.5	15	40.6
PLL1003		3/8"	18	11	21	25.5	54.5	17	40.7
PLL1004		1/2"	18	14	21	25.5	59	21	47.4
PLL1202	12	1/4"	21	10	23	28.5	55.5	15	43
PLL1203		3/8"	21	11	23	29.5	60	17	55.4
PLL1204		1/2"	21	14	23	29.5	63	21	56.7

PHW Series

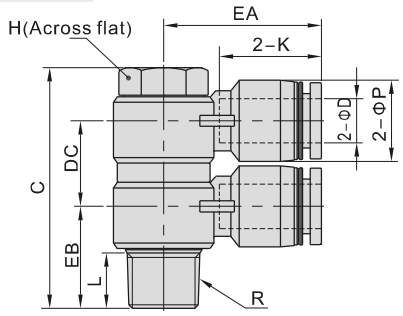

Model\Item	ΦD	R	ΦP	L	C	K	EA	EB	DC	H	Weight(g)
PHW401	4	1/8"	9	7.5	38	14	20.5	14.5	13	11	19
PHW601	6	1/8"	12.5	7.5	38	16.5	23.0	15	13	11	21
PHW602		1/4"	12.5	10	43.5	16.5	25.0	17.5	15.5	14	40.2
PHW603		3/8"	12.5	11	50	16.5	27.0	20	16.5	19	69.2
PHW801	8	1/8"	15	7.5	40.5	18.5	26.5	16.5	15.5	11	23.6
PHW802		1/4"	15	10	43.5	18.5	28.5	18.5	15.5	14	40.8
PHW803		3/8"	15	11	50	18.5	29.5	20	16.5	19	70.4
PHW804		1/2"	15	14	61	18.5	32	24.5	22	24	134.8
PHW1002	10	1/4"	18	10	46.5	21	31	20	18.5	14	47
PHW1003		3/8"	18	11	55	21	33	21	22	19	87.5
PHW1004		1/2"	18	14	61	21	35.5	25	22	24	137.7
PHW1203	12	3/8"	21	11	55	23	36	23	22	19	86.4
PHW1204		1/2"	21	14	61	23	38	26.5	22	24	147.5

PH Series

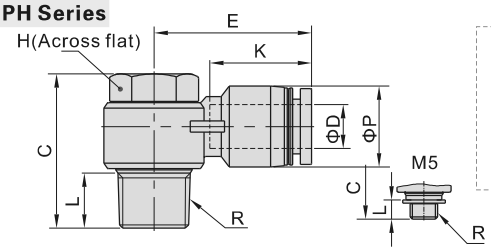

Model\Item	ΦD	R	ΦP	L	C	K	E	H	Weight(g)
PH4M5	4	M5×0.8	9	3.5	17	14	19	8	5.8
PH401		1/8"	9	7.5	25	14	20.5	11	12.8
PH6M5	6	M5×0.8	12.5	3.5	17	16.5	23.5	8	6.8
PH601		1/8"	12.5	7.5	25	16.5	23	11	14
PH602		1/4"	12.5	10	28	16.5	25	14	25.4
PH603		3/8"	12.5	11	33	16.5	27	19	50.2
PH801	8	1/8"	15	7.5	25	18.5	26.5	11	14.7
PH802		1/4"	15	10	28	18.5	28.5	14	26.4
PH803		3/8"	15	11	33	18.5	29.5	19	49.4
PH804		1/2"	15	14	39	18.5	32	24	89
PH1002	10	1/4"	18	10	28	21	31	14	27.7
PH1003		3/8"	18	11	33	21	33	19	51.1
PH1004		1/2"	18	14	39	21	35.5	24	88.5
PH1203	12	3/8"	21	11	33	23	36	19	53
PH1204		1/2"	21	14	39	23	38	24	92.8

PHF Series

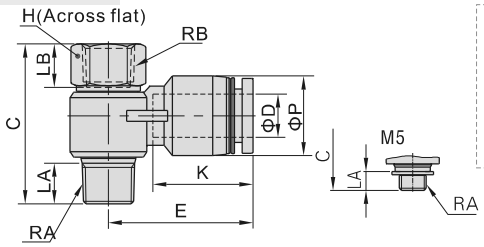

Model\Item	ΦD	RA	RB	ΦP	LA	LB	C	K	E	H	Weight(g)
PHF4M5	4	M5×0.8	M5×0.8	9	3.5	6	20	14	19	8	6.2
PHF401		1/8"	1/8"	9	7.5	8	29.5	14	20.5	12	12.9
PHF6M5	6	M5×0.8	M5×0.8	12.5	3.5	6	20	16.5	23.5	8	7.1
PHF601		1/8"	1/8"	12.5	7.5	8	29.5	16.5	23	12	13.9
PHF602		1/4"	1/4"	12.5	10	11	35	16.5	25	17	30.3
PHF603		3/8"	3/8"	12.5	11	12	40	16.5	27	19	44.2
PHF801	8	1/8"	1/8"	15	7.5	8	29.5	18.5	26.5	12	15
PHF802		1/4"	1/4"	15	10	11	35	18.5	28.5	17	30.7
PHF803		3/8"	3/8"	15	11	12	40	18.5	29.5	19	44.8
PHF804		1/2"	1/2"	15	14	13.5	47.5	18.5	32	24	84.7
PHF1002	10	1/4"	1/4"	18	10	11	35	21	31	17	32
PHF1003		3/8"	3/8"	18	11	12	40	21	33	19	46.2
PHF1004		1/2"	1/2"	18	14	13.5	47.5	21	35.5	24	86.1
PHF1203	12	3/8"	3/8"	21	11	12	40	23	36	19	48.4
PHF1204		1/2"	1/2"	21	14	13.5	47.5	23	38	24	89.7

PKD Series

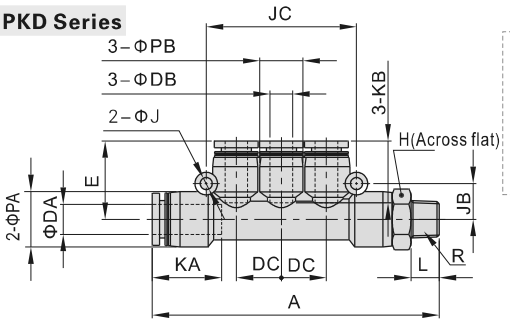

Model\Item	ΦDA	ΦDB	R	L	A	ΦPA	ΦPB	KA
PKD6-401	6	4	1/8"	7.5	66.5	12.5	9	16.5
PKD8-602	8	6	1/4"	10	79	15	12.5	18.5
PKD10-803	10	8	3/8"	11	91.5	18	15	21

Model\Item	KB	ΦJ	JB	JC	DC	E	H	Weight(g)
PKD6-401	14	3.2	8	34	10	17.5	12	15.8
PKD8-602	16.5	3.2	9.5	40	12	21	14	26.5
PKD10-803	18.5	4.3	11	48	14.5	24	17	38.2

One-touch fittings—threaded type

PEB Series

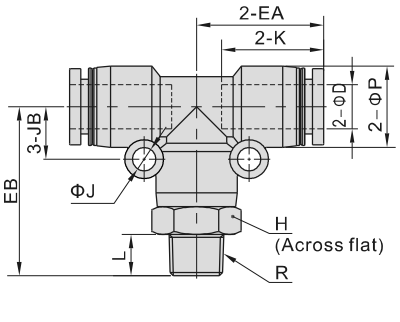

Model\Item	ΦD	R	ΦP	L	K	EA	EB	ΦJ	JB	H	Weight(g)
PEB4M5	4	M5×0.8	9	3.5	14	17	21	3.2	6.5	9	6.8
PEB401		1/8"	9	7.5	14	17	25	3.2	6.5	10	8.8
PEB402		1/4"	9	10	14	17	28	3.2	6.5	14	15.5
PEB6M5	6	M5×0.8	12.5	3.5	16.5	20	23.5	3.2	8	12	11.2
PEB601		1/8"	12.5	7.5	16.5	20	27.5	3.2	8	12	13.5
PEB602		1/4"	12.5	10	16.5	20	30.5	3.2	8	14	18.6
PEB603		3/8"	12.5	11	16.5	20	32	3.2	8	17	25.3
PEB801	8	1/8"	15	7.5	18.5	23	30.5	4.3	9.5	14	18.4
PEB802		1/4"	15	10	18.5	23	33	4.3	9.5	14	21.3
PEB803		3/8"	15	11	18.5	23	34.5	4.3	9.5	17	28.2
PEB804		1/2"	15	14	18.5	23	38.5	4.3	9.5	21	41
PEB1001	10	1/8"	18	7.5	21	26.5	34	4.3	11	17	26.7
PEB1002		1/4"	18	10	21	26.5	36.5	4.3	11	17	29.2
PEB1003		3/8"	18	11	21	26.5	37.5	4.3	11	17	31.9
PEB1004		1/2"	18	14	21	26.5	41.5	4.3	11	21	45.4
PEB1202	12	1/4"	21	10	23	30	41	4.3	13	21	49.6
PEB1203		3/8"	21	11	23	30	42	4.3	13	21	51.2
PEB1204		1/2"	21	14	23	30	45	4.3	13	21	57.3

PYB Series

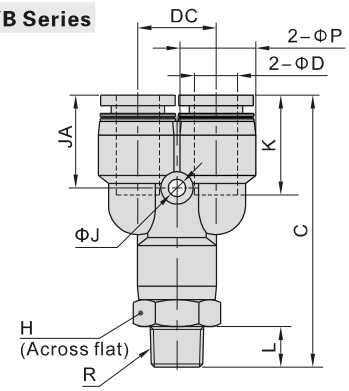

Model\Item	ΦD	R	ΦP	L	C	K	ΦJ	JA	DC	H	Weight(g)
PYB4M5	4	M5×0.8	9	3.5	35.5	14	3.2	13	10	9	6.7
PYB401		1/8"	9	7.5	39.5	14	3.2	13	10	10	9
PYB402		1/4"	9	10	42.5	14	3.2	13	10	14	10.8
PYB6M5	6	M5×0.8	12.5	3.5	40.5	16.5	3.2	15.5	12	12	11.1
PYB601		1/8"	12.5	7.5	44.5	16.5	3.2	15.5	12	12	13.7
PYB602		1/4"	12.5	10	47.5	16.5	3.2	15.5	12	14	18.2
PYB603		3/8"	12.5	11	49.0	16.5	3.2	15.5	12	17	25
PYB801	8	1/8"	15	7.5	50	18.5	3.2	17	14.5	14	19.8
PYB802		1/4"	15	10	52.5	18.5	3.2	17	14.5	14	22
PYB803		3/8"	15	11	54	18.5	3.2	17	14.5	17	27.7
PYB804		1/2"	15	14	58	18.5	3.2	17	14.5	21	40.8
PYB1001	10	1/8"	18	7.5	56.5	21	4.3	19.5	18	17	27.4
PYB1002		1/4"	18	10	59	21	4.3	19.5	18	17	29.5
PYB1003		3/8"	18	11	60	21	4.3	19.5	18	17	32.5
PYB1004		1/2"	18	14	64	21	4.3	19.5	18	21	45.4
PYB1202	12	1/4"	21	10	66	23	4.3	21	20.5	21	27.3
PYB1203		3/8"	21	11	67	23	4.3	21	20.5	21	51.8
PYB1204		1/2"	21	14	70	23	4.3	21	20.5	21	56.8

PED Series

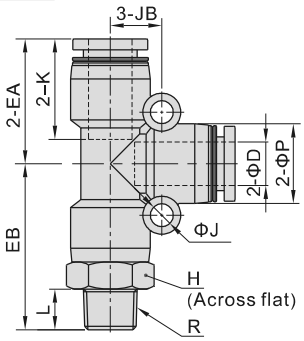

Model\Item	ΦD	R	ΦP	L	K	EA	EB	ΦJ	JB	H	Weight(g)
PED4M5	4	M5×0.8	9	3.5	14	17	21	3.2	6.5	9	6.8
PED401		1/8"	9	7.5	14	17	25	3.2	6.5	10	8.8
PED402		1/4"	9	10	14	17	28	3.2	6.5	14	15.5
PED6M5	6	M5×0.8	12.5	3.5	16.5	20	23.5	3.2	8	12	11.2
PED601		1/8"	12.5	7.5	16.5	20	27.5	3.2	8	12	13.5
PED602		1/4"	12.5	10	16.5	20	30.5	3.2	8	14	18.6
PED603		3/8"	12.5	11	16.5	20	32	3.2	8	17	25.3
PED801	8	1/8"	15	7.5	18.5	23	30.5	4.3	9.5	14	18.4
PED802		1/4"	15	10	18.5	23	33	4.3	9.5	14	21.3
PED803		3/8"	15	11	18.5	23	34.5	4.3	9.5	17	28.2
PED804		1/2"	15	14	18.5	23	38.5	4.3	9.5	21	41
PED1001	10	1/8"	18	7.5	21	26.5	34	4.3	11	17	26.7
PED1002		1/4"	18	10	21	26.5	36.5	4.3	11	17	29.2
PED1003		3/8"	18	11	21	26.5	37.5	4.3	11	17	31.9
PED1004		1/2"	18	14	21	26.5	41.5	4.3	11	21	45.4
PED1202	12	1/4"	21	10	23	30	41	4.3	13	21	49.6
PED1203		3/8"	21	11	23	30	42	4.3	13	21	51.2
PED1204		1/2"	21	14	23	30	45	4.3	13	21	57.3

PZB Series

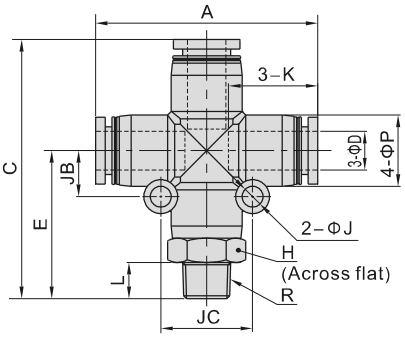

Model\Item	ΦD	R	L	A	E	C	ΦP	K	ΦJ	JB	JC	H	Weight(g)
PZB601	6	1/8"	7.5	39.5	27.5	47.5	12.5	16.5	3.2	8	16	12	15.2
PZB602		1/4"	10		30.5	50.5						14	20.4
PZB603		3/8"	11		32	52						17	27
PZB801	8	1/8"	7.5	46	30.5	53.5	15	18.5	4.3	9.5	19	14	20.9
PZB802		1/4"	10		33	56						14	23.8
PZB803		3/8"	11		34.5	57.5						17	29.9
PZB804		1/2"	14		38.5	61.5						21	43.5
PZB1002	10	1/4"	10	52.5	36.5	63	18	21	4.3	11	22	17	33.5
PZB1003		3/8"	11		37.5	64						17	36.5
PZB1004		1/2"	14		41.5	68						21	49.2
PZB1203	12	3/8"	11	59.5	42	72	21	23	4.3	13	26	21	56.5
PZB1204		1/2"	14		45	75						21	65.4